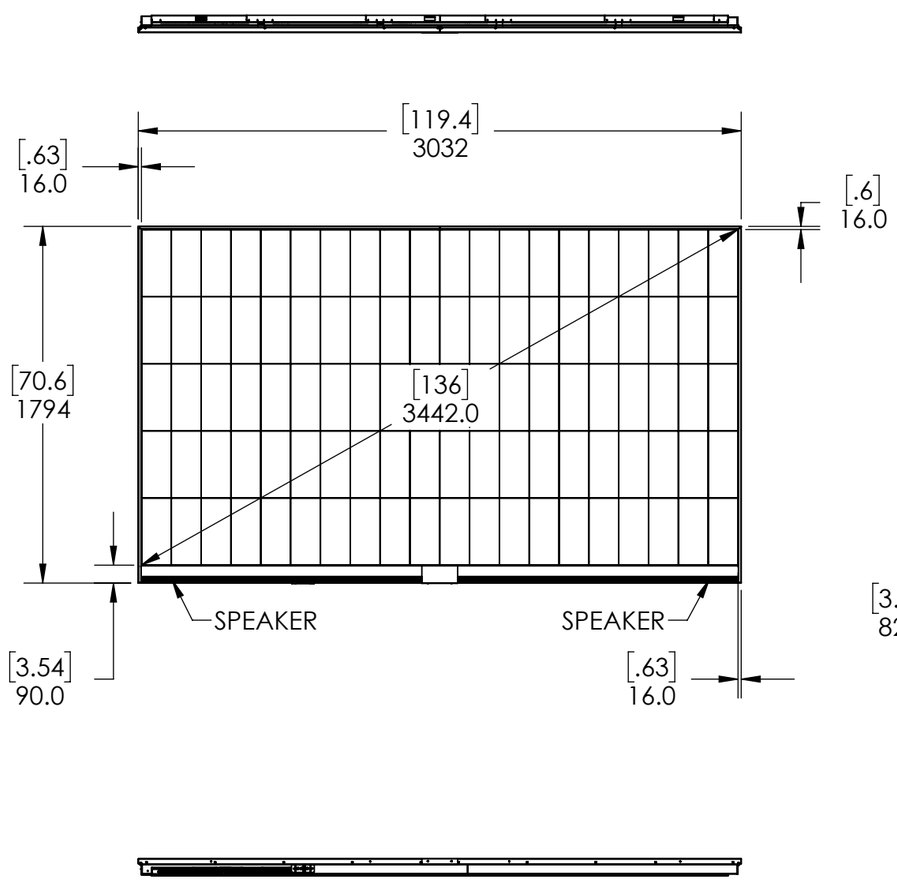

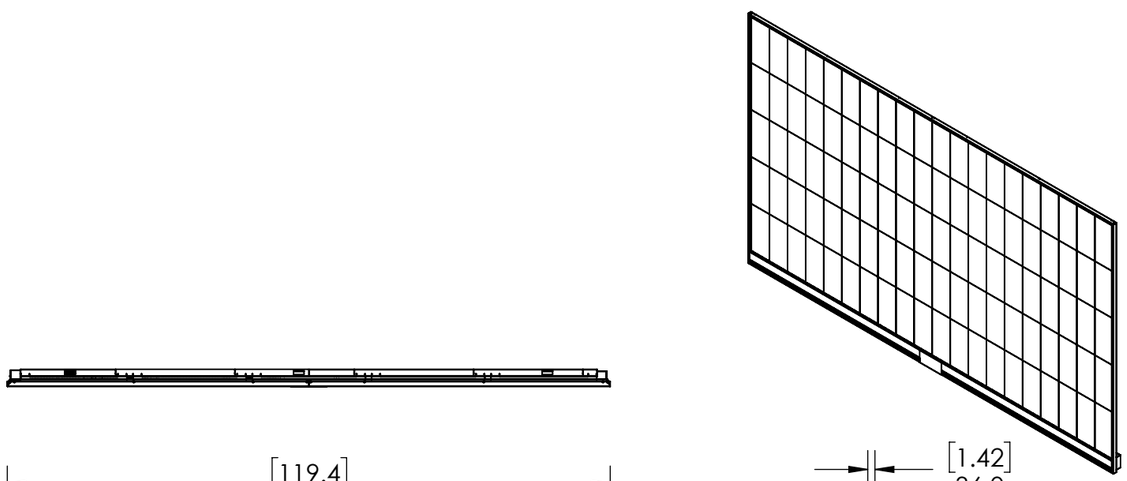

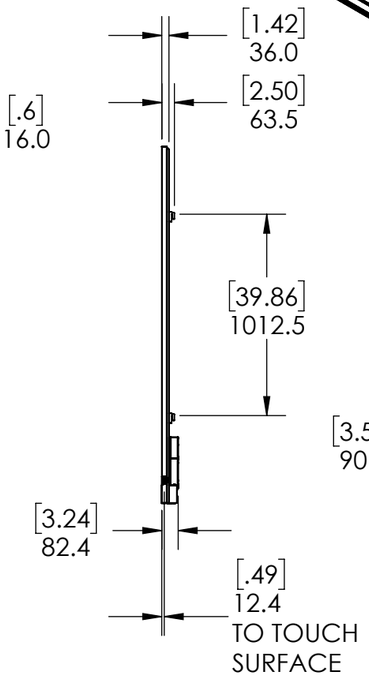

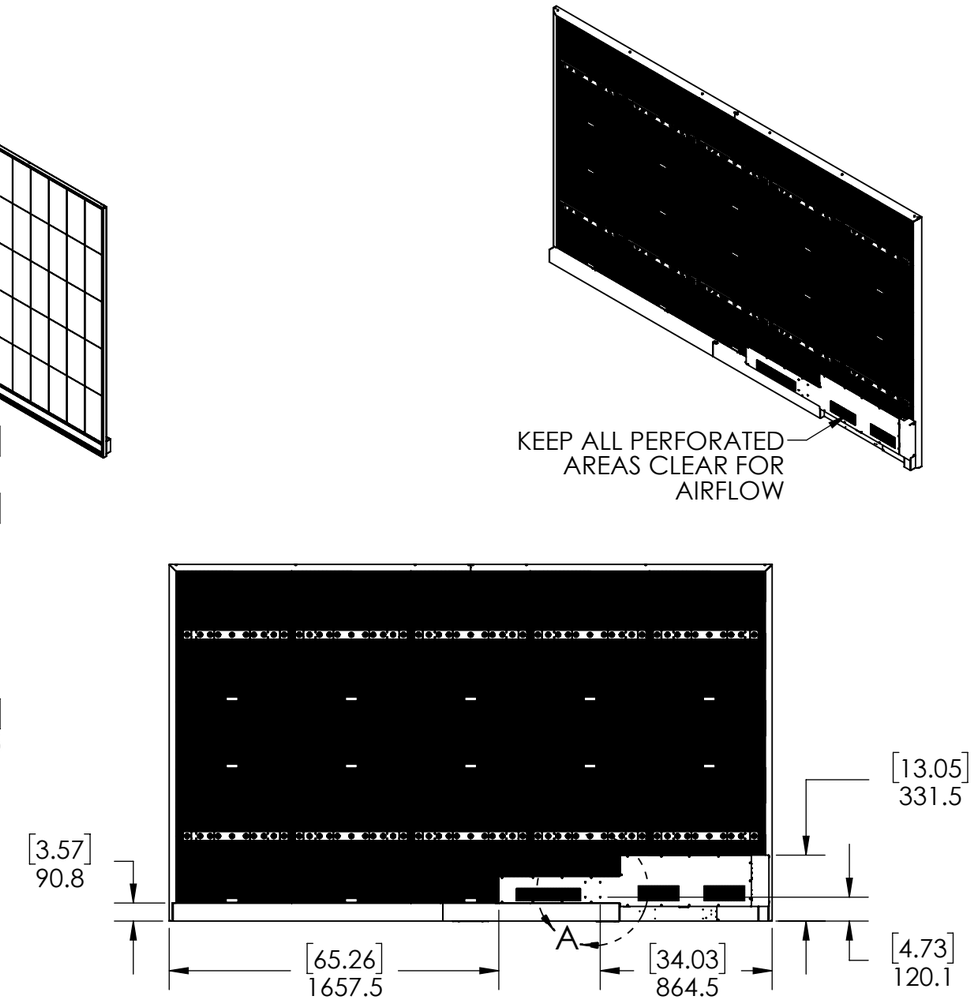

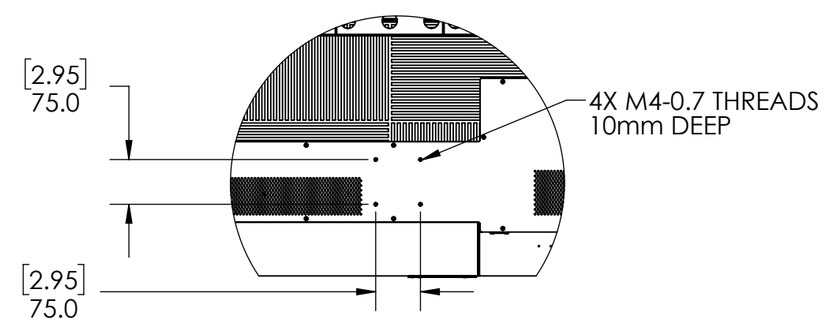

VESA ACCESSORY MOUNT (DETAIL A)
SCALE 1 : 10

2. THE TERMS HDMI®, HDMI HIGH-DEFINITION MULTIMEDIA INTERFACE, HDMI TRADE DRESS AND THE HDMI LOGOS ARE TRADEMARKS OR REGISTERED TRADEMARKS OF HDMI LICENSING ADMINISTRATOR, INC.
1. SPECIFICATIONS SUBJECT TO CHANGE WITHOUT NOTICE.

NOTES: UNLESS OTHERWISE SPECIFIED

PLANAR SYSTEMS, INC.
1195 NE COMPTON DRIVE
HILLSBORO, OR 97006 USA

THIS DRAWING CONTAINS INFORMATION PROPRIETARY TO PLANAR SYSTEMS, INC., ANY REPRODUCTION IN PART OR WHOLE WITHOUT THE WRITTEN PERMISSION OF PLANAR SYSTEMS IS PROHIBITED. THIS DRAWING IS SUPPLIED FOR INFORMATION, IDENTIFICATION, ENGINEERING, EVALUATION, AND/OR INSPECTION PURPOSES ONLY AND MAY NOT BE USED AS BASIS FOR THE MANUFACTURING OF PRODUCTS OR THE FURNISHING OF SERVICES TO PLANAR SYSTEMS OR TO ANY THIRD PARTY UNLESS AUTHORIZED IN WRITING BY PLANAR SYSTEMS.

PRODUCT: URL136-T

PART NO.: 998-3398-XX

SHEET TITLE: PRODUCT OUTLINE - 1

UNLESS OTHERWISE SPECIFIED DIMENSIONS ARE IN MILLIMETERS [INCHES].

DRAWN BY: CJJ

DRAWN DATE: 23 May 23

SHEET: 1 OF 5

SHEET SIZE: B

REVISION: B

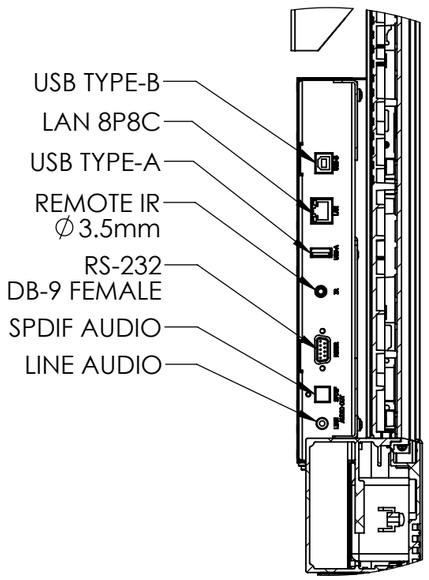

DETAIL C
SCALE 1 : 4

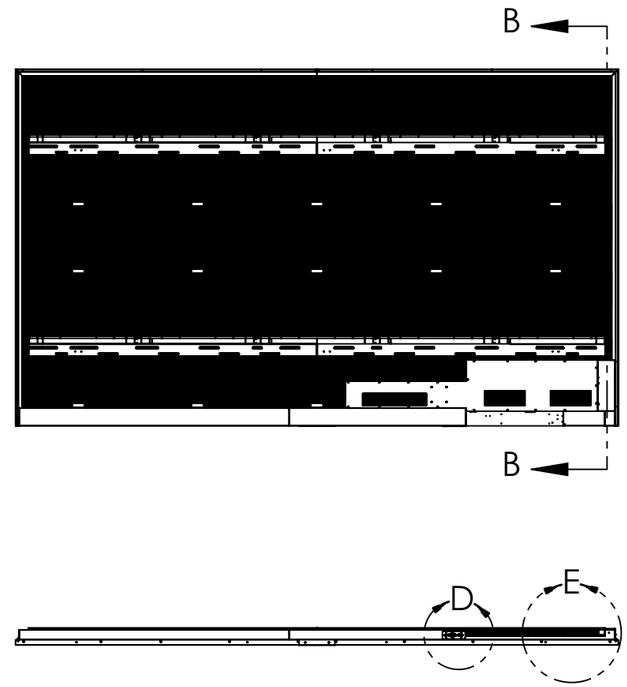

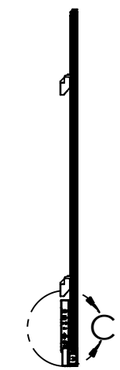

SECTION B-B
SCALE 1 : 30

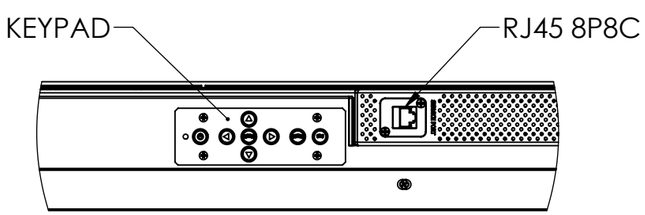

DETAIL D
SCALE 1 : 4

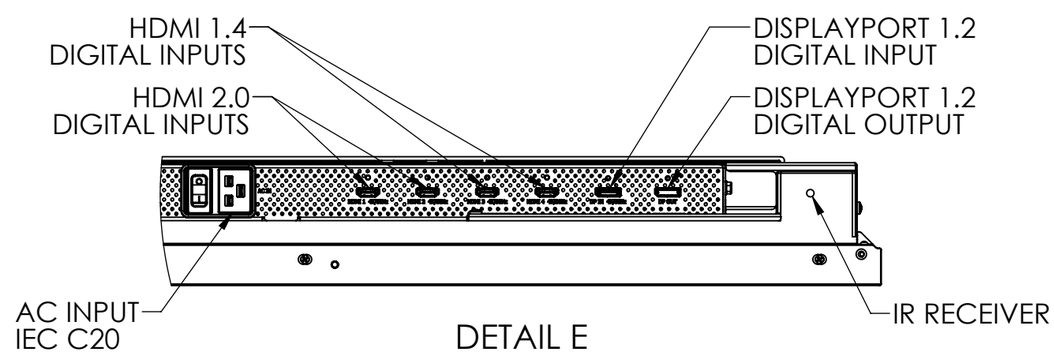

DETAIL E
SCALE 1 : 4

1. SPECIFICATIONS SUBJECT TO CHANGE WITHOUT NOTICE.

NOTES: UNLESS OTHERWISE SPECIFIED

PLANAR SYSTEMS, INC.
1195 NE COMPTON DRIVE
HILLSBORO, OR 97006 USA

THIS DRAWING CONTAINS INFORMATION PROPRIETARY TO PLANAR SYSTEMS, INC., ANY REPRODUCTION IN PART OR WHOLE WITHOUT THE WRITTEN PERMISSION OF PLANAR SYSTEMS IS PROHIBITED. THIS DRAWING IS SUPPLIED FOR INFORMATION, IDENTIFICATION, ENGINEERING, EVALUATION, AND/OR INSPECTION PURPOSES ONLY AND MAY NOT BE USED AS BASIS FOR THE MANUFACTURING OF PRODUCTS OR THE FURNISHING OF SERVICES TO PLANAR SYSTEMS OR TO ANY THIRD PARTY UNLESS AUTHORIZED IN WRITING BY PLANAR SYSTEMS.

PRODUCT: URL136-T

PART NO.: 998-3398-XX

SHEET TITLE: PRODUCT OUTLINE - 2

UNLESS OTHERWISE SPECIFIED DIMENSIONS ARE IN MILLIMETERS [INCHES].

DRAWN BY: CJJ

DRAWN DATE: 23 May 23

SHEET: 2 OF 5

SHEET SIZE: B

REVISION: B

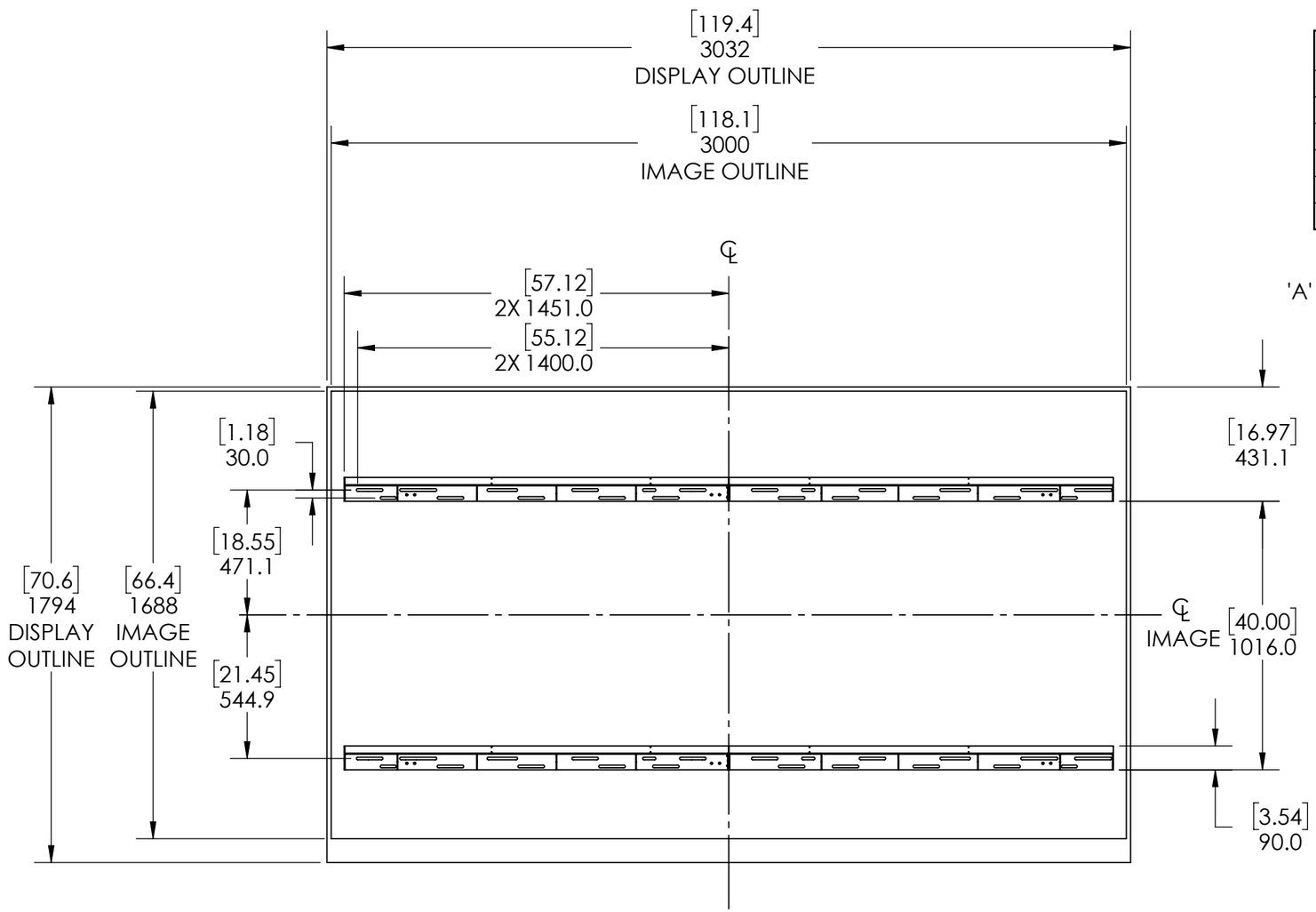

MINIMUM GAP TO CEILING		
	'A'	
CONDITION	mm	in
RECOMMENDED	102	4.0
TOOL ACCESS	75	3.0
TRIM INSTALL	60	2.4
COLUMN INSTALL	30	1.2

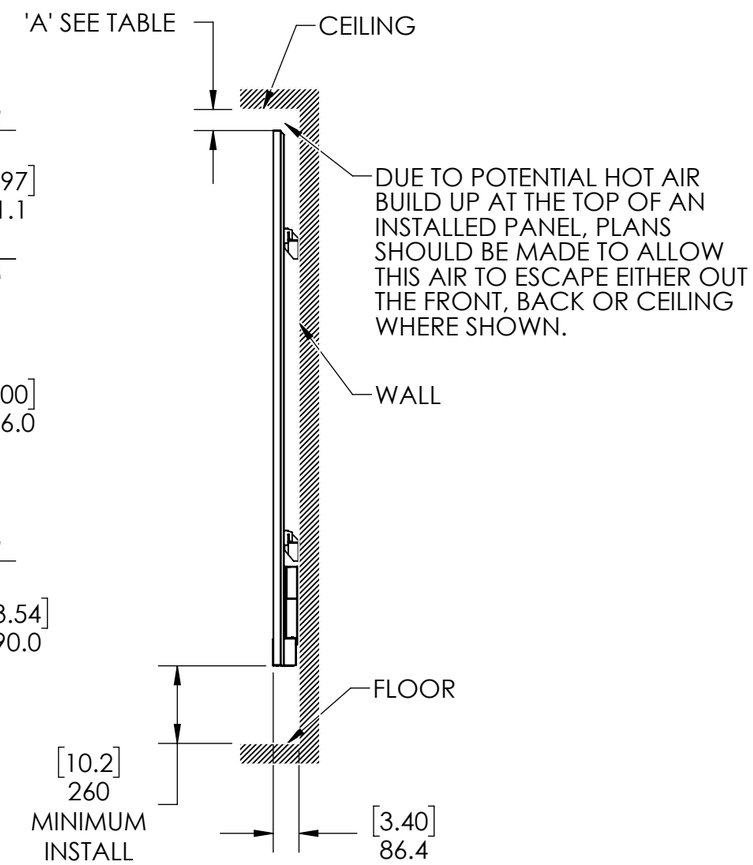

1. SPECIFICATIONS SUBJECT TO CHANGE WITHOUT NOTICE.

NOTES: UNLESS OTHERWISE SPECIFIED

PLANAR SYSTEMS, INC.
1195 NE COMPTON DRIVE
HILLSBORO, OR 97006 USA

THIS DRAWING CONTAINS INFORMATION PROPRIETARY TO PLANAR SYSTEMS, INC., ANY REPRODUCTION IN PART OR WHOLE WITHOUT THE WRITTEN PERMISSION OF PLANAR SYSTEMS IS PROHIBITED. THE DRAWING IS SUPPLIED FOR INFORMATION, IDENTIFICATION, ENGINEERING, EVALUATION, AND/OR INSPECTION PURPOSES ONLY AND MAY NOT BE USED AS BASIS FOR THE MANUFACTURING OF PRODUCTS OR THE FURNISHING OF SERVICES TO PLANAR SYSTEMS OR TO ANY THIRD PARTY UNLESS AUTHORIZED IN WRITING BY PLANAR SYSTEMS.

PRODUCT: URL136-T

PART NO.: 998-3398-XX

SHEET TITLE: WALL MOUNT

UNLESS OTHERWISE SPECIFIED DIMENSIONS ARE IN MILLIMETERS [INCHES].

DRAWN BY: CJJ

DRAWN DATE: 23 May 23

SHEET: 3 OF 5

SHEET SIZE: B

REVISION: B

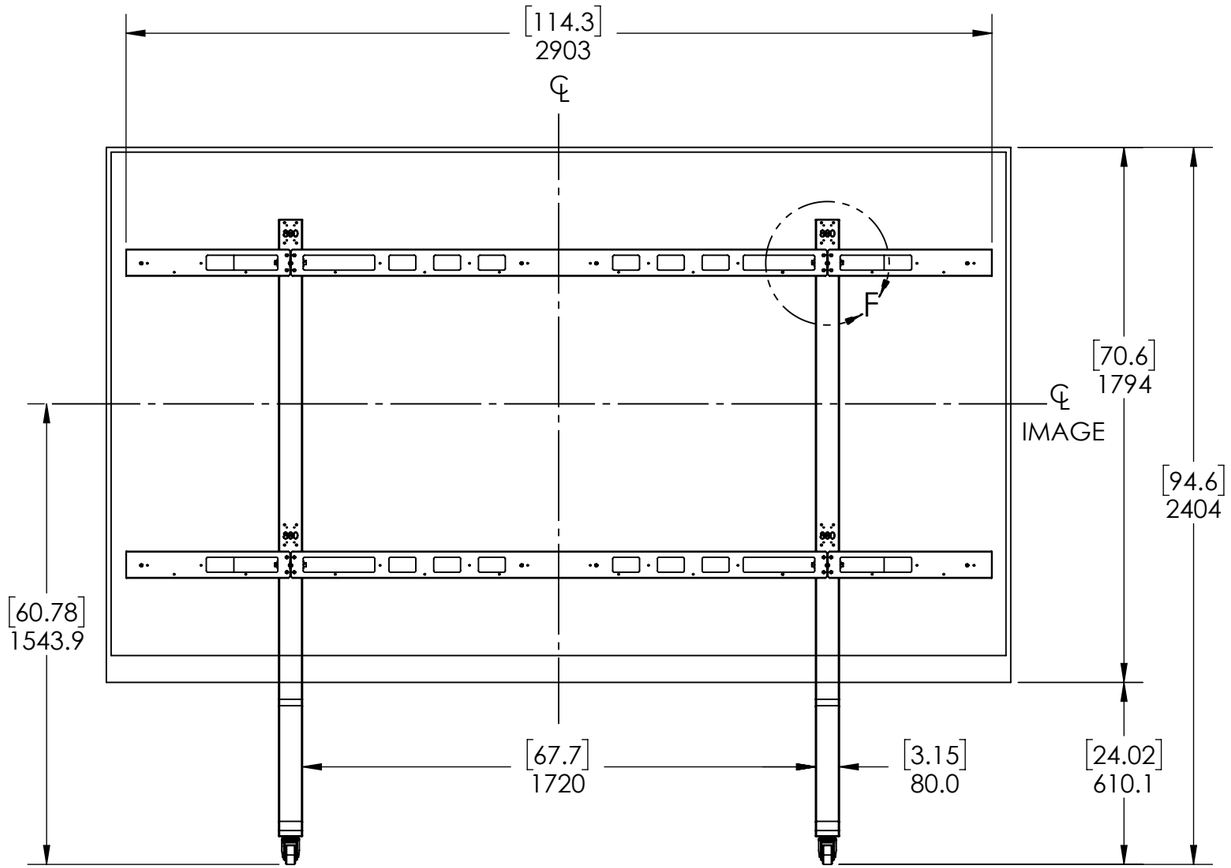

SHOWN IN LOWER MOUNT POSITION

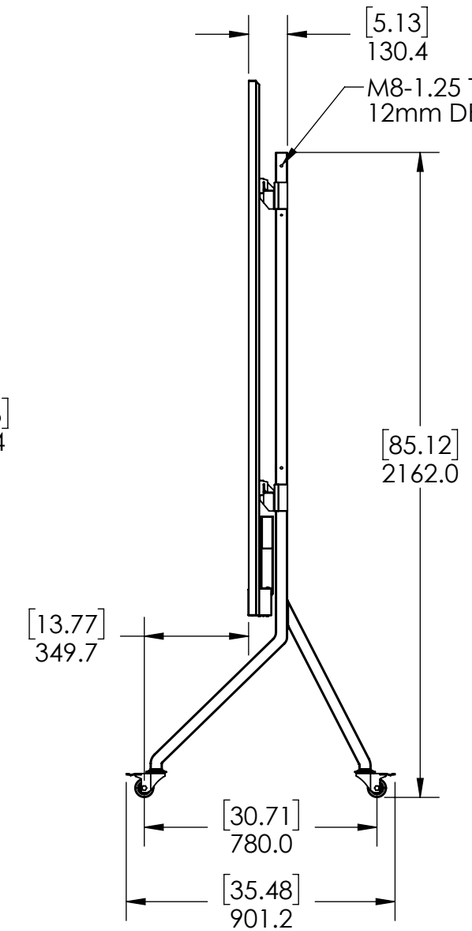

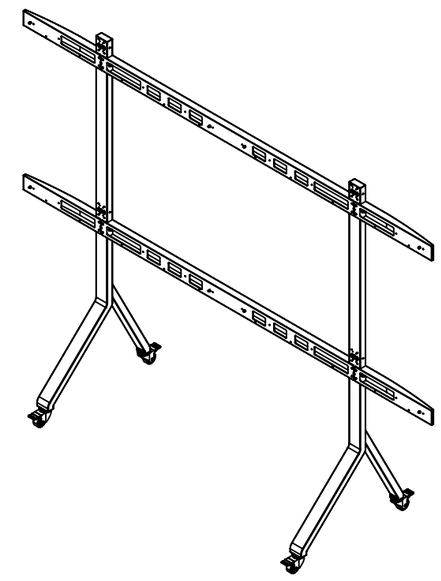

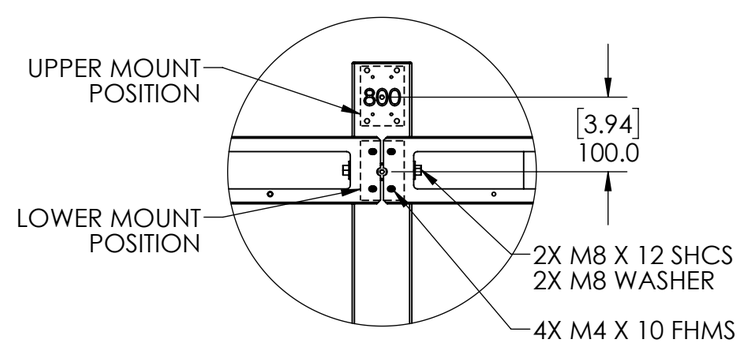

DETAIL F
SCALE 1 : 8

3. SPECIFICATIONS SUBJECT TO CHANGE WITHOUT NOTICE.FOR DISPLAYS MOUNTED IN THE UPPER MOUNT POSITION INCREASE HEIGHT OF DISPLAY POSITIONS BY 100mm (4").
2. DO NOT EXCEED +5mm (0.20") FROM POSITIONS SHOWN FOR THE CASTER IF IT BECOMES UNTHREADED.
1. SPECIFICATIONS SUBJECT TO CHANGE WITHOUT NOTICE.

NOTES: UNLESS OTHERWISE SPECIFIED

PLANAR SYSTEMS, INC.
1195 NE COMPTON DRIVE
HILLSBORO, OR 97006 USA

THIS DRAWING CONTAINS INFORMATION PROPRIETARY TO PLANAR SYSTEMS, INC., ANY REPRODUCTION IN PART OR WHOLE WITHOUT THE WRITTEN PERMISSION OF PLANAR SYSTEMS IS PROHIBITED. THIS DRAWING IS SUPPLIED FOR INFORMATION, IDENTIFICATION, ENGINEERING, EVALUATION, AND/OR INSPECTION PURPOSES ONLY AND MAY NOT BE USED AS BASIS FOR THE MANUFACTURING OF PRODUCTS OR THE FURNISHING OF SERVICES TO PLANAR SYSTEMS OR TO ANY THIRD PARTY UNLESS AUTHORIZED IN WRITING BY PLANAR SYSTEMS.

PRODUCT: URL136-T

PART NO.: 998-3398-XX

SHEET TITLE: STAND MOUNT

UNLESS OTHERWISE SPECIFIED DIMENSIONS ARE IN MILLIMETERS [INCHES].

DRAWN BY: CJJ

DRAWN DATE: 23 May 23

SHEET: 4 OF 5

SHEET SIZE: B

REVISION: B

MINIMUM GAP TO TOP OF RECESS		
	'A'	
CONDITION	mm	in
RECOMMENDED	102	4.0
TOOL ACCESS	75	3.0
TRIM INSTALL	60	2.4
COLUMN INSTALL	30	1.2

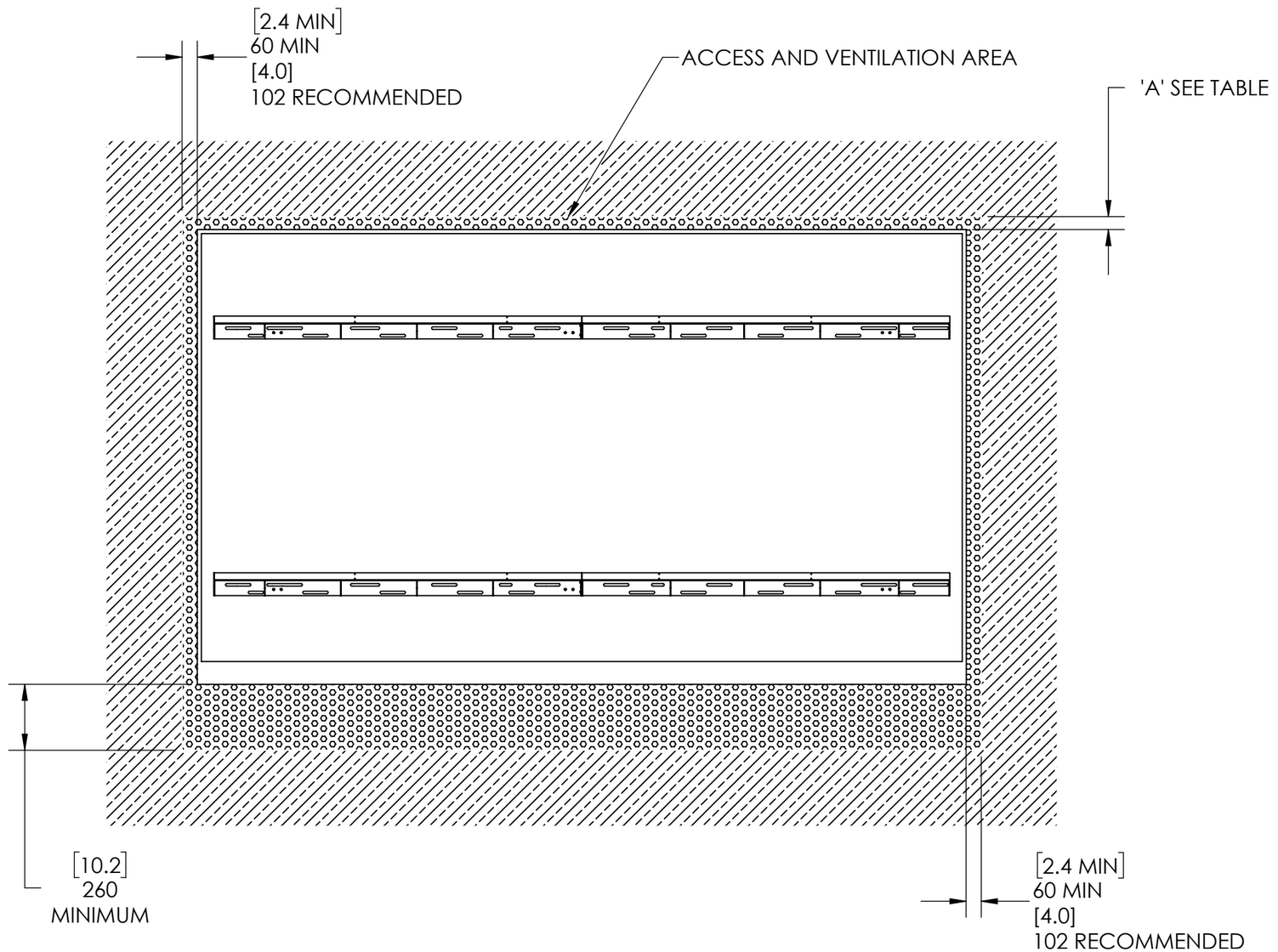

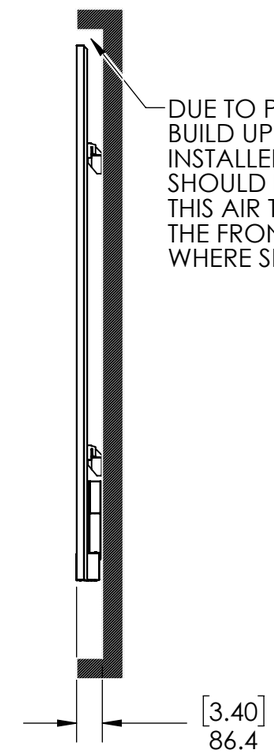

3. GAPS ABOVE AND BELOW THE PANEL MAY BE CLOSED BY A GRID (MIN 50% OPEN AREA) WHICH CAN BE REMOVED FOR SERVICING.
2. GAPS ON THE LEFT AND RIGHT OF THE PANEL MAY BE CLOSED BY A REMOVABLE SOLID MATERIAL OR GRID MATERIAL.
1. SPECIFICATIONS SUBJECT TO CHANGE WITHOUT NOTICE.

NOTES: UNLESS OTHERWISE SPECIFIED

PLANAR SYSTEMS, INC.
1195 NE COMPTON DRIVE
HILLSBORO, OR 97006 USA

THIS DRAWING CONTAINS INFORMATION PROPRIETARY TO PLANAR SYSTEMS, INC., ANY REPRODUCTION IN PART OR WHOLE WITHOUT THE WRITTEN PERMISSION OF PLANAR SYSTEMS IS PROHIBITED. THIS DRAWING IS SUPPLIED FOR INFORMATION, IDENTIFICATION, ENGINEERING, EVALUATION, AND/OR INSPECTION PURPOSES ONLY AND MAY NOT BE USED AS BASIS FOR THE MANUFACTURING OF PRODUCTS OR THE FURNISHING OF SERVICES TO PLANAR SYSTEMS OR TO ANY THIRD PARTY UNLESS AUTHORIZED IN WRITING BY PLANAR SYSTEMS.

PRODUCT: URL136-T

PART NO.: 998-3398-XX

SHEET TITLE: RECESSED MOUNT

UNLESS OTHERWISE SPECIFIED DIMENSIONS ARE IN MILLIMETERS [INCHES].

DRAWN BY: CJJ

DRAWN DATE: 23 May 23

SHEET: 5 OF 5

SHEET SIZE: B

REVISION: B