050-0216-00 REV B

NOTES:

1. ALL DIMENSIONS IN INCHES [MILLIMETERS]
2. DIMENSIONS SUBJECT TO CHANGE.

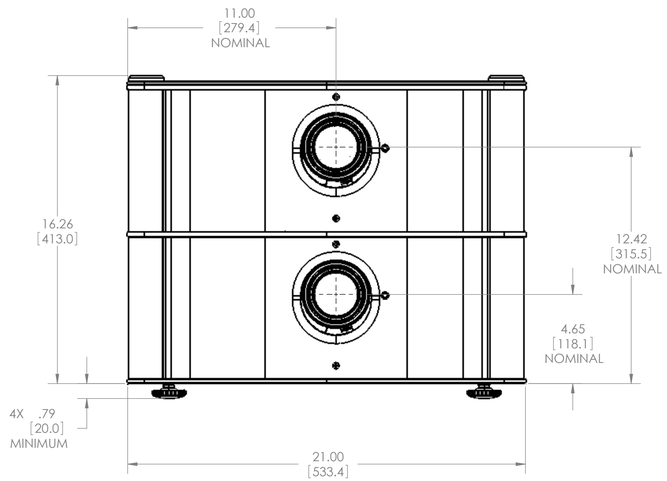

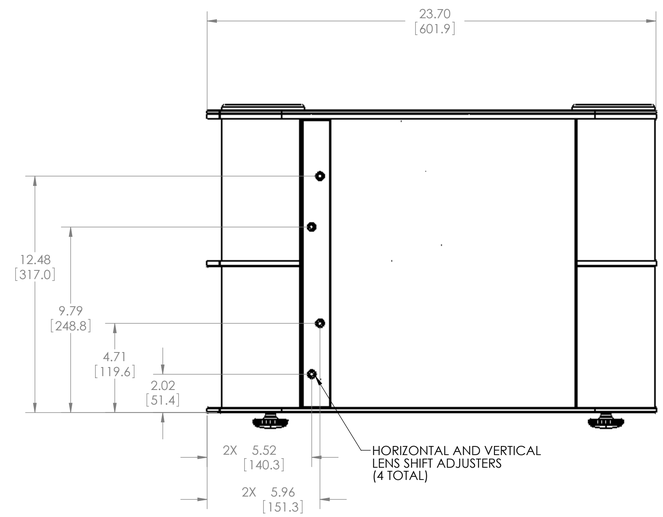

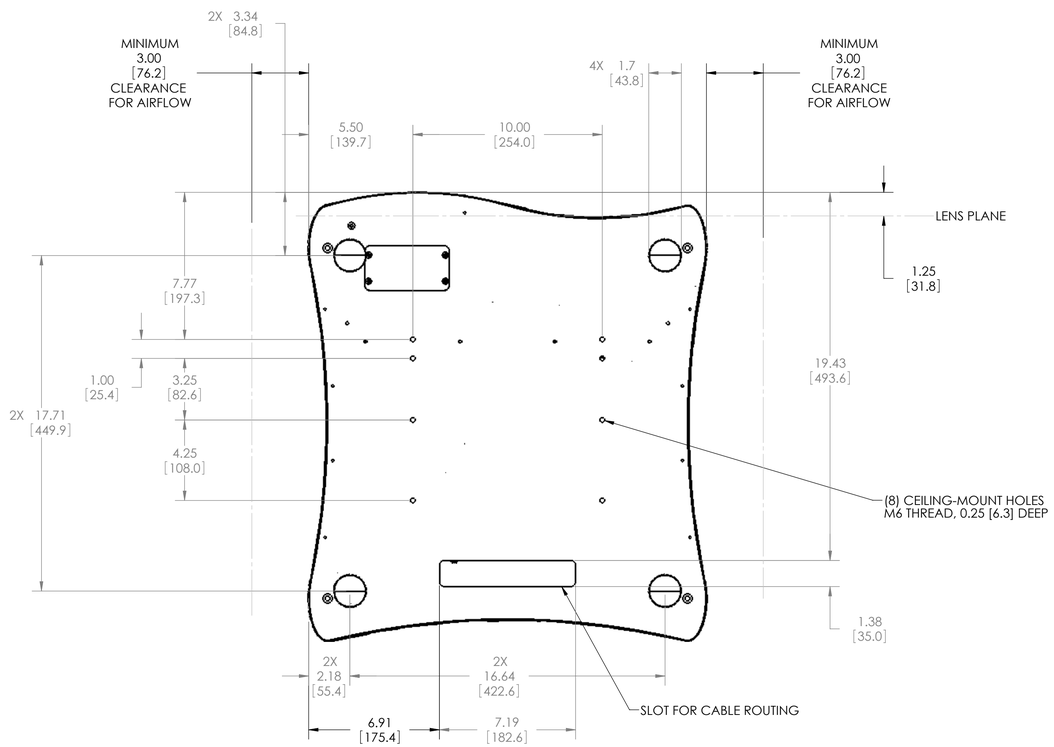

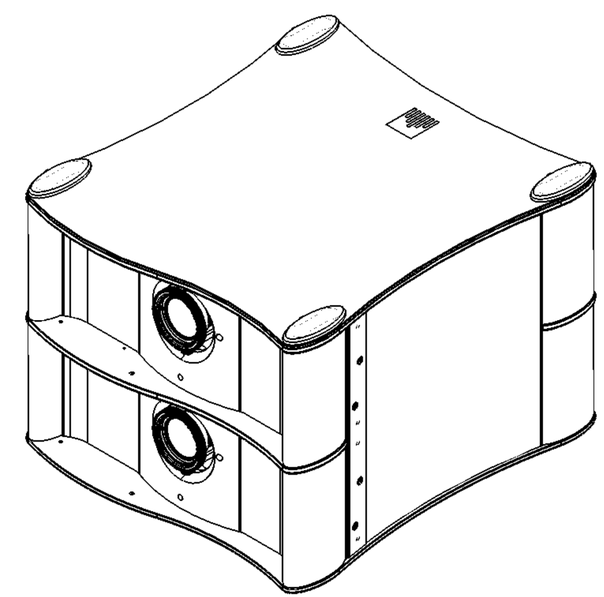

UNLESS OTHERWISE SPECIFIED DIMENSIONS ARE IN INCHES	ENGR BY	P. Williams	12-15-2010
TOLERANCES - UNLESS OTHERWISE SPECIFIED	DRAWN BY	P. Williams	03-18-2011
.X= ±.1 .XXX= ±.005	CHECKED BY		
.XX= ±.01 ANGLES= ±1°	USED ON	RUNCO Q-1500D	
DIMENSIONING AND TOLERANCING PER ASME Y14.5M-1994	MATERIAL		
THIRD ANGLE PROJECTION	FINISH		

RUNCO INTERNATIONAL
1195 NW COMPTON DRIVE
BEAVERTON, OR 97006 USA

TITLE: Q-1500d Overall Dimensions

SIZE	PART NUMBER	DRAWING NUMBER	REV
D		Q-1500d_Overall_Dimensions	
SCALE 1:4	DO NOT SCALE	SHEET 1 OF 1	

THIS DRAWING CONTAINS INFORMATION PROPRIETARY TO PLANAR SYSTEMS, INC., ANY REPRODUCTION IN PART OR WHOLE WITHOUT THE WRITTEN PERMISSION OF PLANAR SYSTEMS IS PROHIBITED. THIS DRAWING IS SUPPLIED FOR INFORMATION, IDENTIFICATION, ENGINEERING, EVALUATION, AND/OR INSPECTION PURPOSES ONLY AND MAY NOT BE USED AS BASIS FOR THE MANUFACTURING OF PRODUCTS OR THE FURNISHING OF SERVICES TO PLANAR SYSTEMS OR TO ANY THIRD PARTY UNLESS AUTHORIZED IN WRITING BY PLANAR SYSTEMS.