| REVISION HISTORY | | | | | |
|---|---|---|---|---|---|
| ECO | ZONE | REV. | DESCRIPTION | DATE | APPR'D |

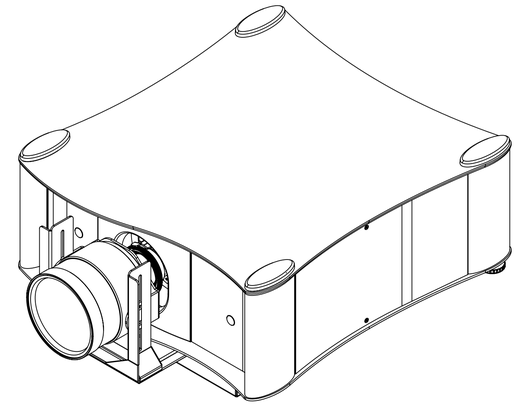

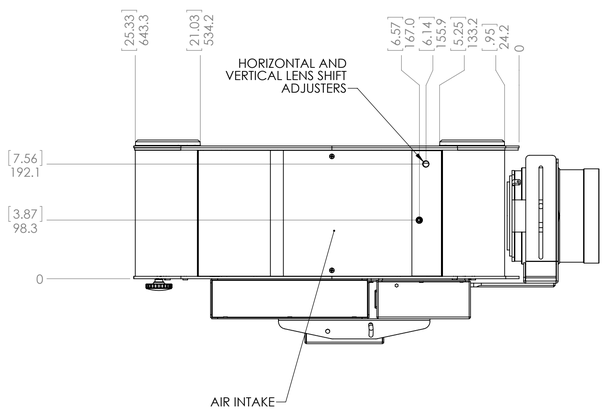


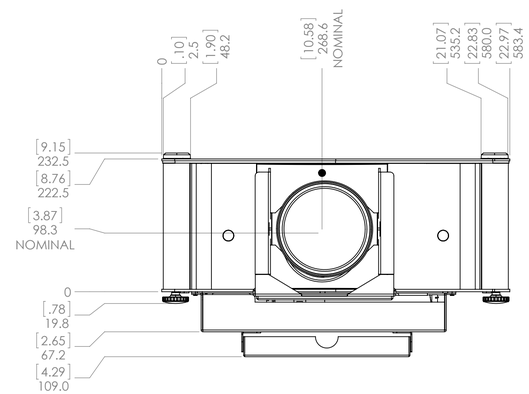


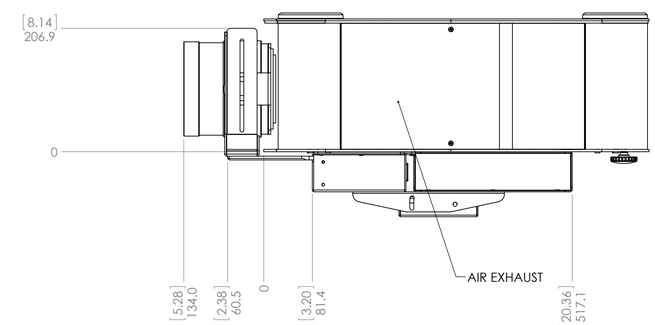


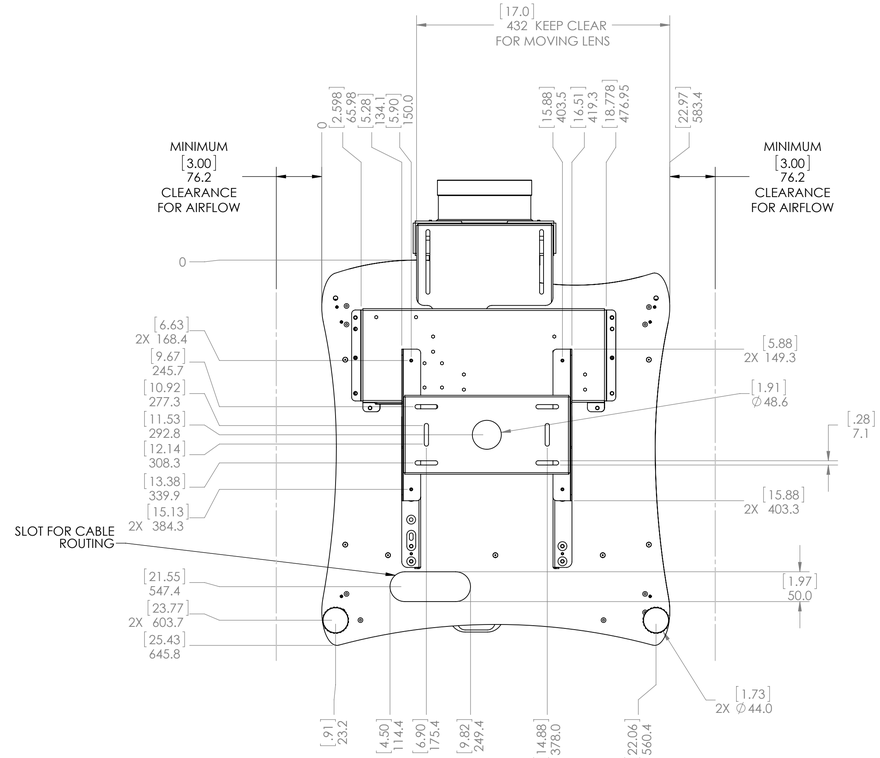


1. SPECIFICATIONS SUBJECT TO CHANGE WITHOUT NOTICE.

NOTES: UNLESS OTHERWISE SPECIFIED.

UNLESS OTHERWISE SPECIFIED DIMENSIONS ARE IN MILLIMETERS [INCHES].

TOLERANCES:

| | |
|---|---|
| X= ±1 | XX= ±.25 |
| X= ±.5 | ∠= ±1° |

DIMENSIONING AND TOLERANCING PER ASME Y14.5M-1994

THIRD ANGLE PROJECTION

| | | |
|---|---|---|
| ENGR BY | | |
| DRAWN BY | EJS | 22OCT12 |
| CHECKED BY | | |
| USED ON | | |
| MATERIAL | | |
| FINISH | | |

PLANAR

PLANAR SYSTEMS, INC.
1195 NW COMPTON DRIVE
BEAVERTON, OR 97006 USA

TITLE: X-200i CINEWIDE AS OVERALL DIMENSIONS

| SIZE | PART NO. | DRAWING NO. | REV |
|---|---|---|---|
| D | - | - | A |

| SCALE | | SHEET |
|---|---|---|
| 1:5 | DO NOT SCALE | 1 OF 1 |

THIS DRAWING CONTAINS INFORMATION PROPRIETARY TO PLANAR SYSTEMS, INC., ANY REPRODUCTION IN PART OR WHOLE WITHOUT THE WRITTEN PERMISSION OF PLANAR SYSTEMS IS PROHIBITED. THIS DRAWING IS SUPPLIED FOR INFORMATION, IDENTIFICATION, ENGINEERING, EVALUATION, AND/OR INSPECTION PURPOSES ONLY AND MAY NOT BE USED AS BASIS FOR THE MANUFACTURING OF PRODUCTS OR THE FURNISHING OF SERVICES TO PLANAR SYSTEMS OR TO ANY THIRD PARTY UNLESS AUTHORIZED IN WRITING BY PLANAR SYSTEMS.